UE Electronic

Switching Power Supply Open Frame Style

Universal 300 Watt - UES300-SPAZ-OP

CLASS I & II

170W CONVECTION COOLED

300W FAN COOLED







Product Features

- Medical & I.T.E. safety approvals
- 2 MOPP input to output isolation
- Leakage current: ≤ 100μA
- Efficiency up to 94%
- ≤ 0.5W standby power
- Up to 5,000m operating altitude

Models & Ratings

Model Number	Voltage (V) (*1)	Current at convection (A)	Rated Power (W)	Ripple & Noise (max)(*2)	Voltage Tolerance	Line & Load Regulation	Efficiency (Average)	Start Up Delay
UES300-XXXYYYSPAZ-OP (*3) (*4) UES300-XXXYYYSPAZ-OPC (*5)	12.0	13.33	159.96	150mVpk-pk	±5%	Line: ±1% Load: ±5%	92.0%	≤3s
	15.0	10.67	160.05	150mVpk-pk	±5%		92.0%	≤3s
	18.0	9.44	169.92	150mVpk-pk	±5%		92.0%	≤3s
	19.0	8.95	170.05	200mVpk-pk	±5%		93.0%	≤3s
	24.0	7.08	169.92	200mVpk-pk	±5%		93.0%	≤3s
	36.0	4.72	169.92	300mVpk-pk	±5%		93.0%	≤3s
	48.0	3.54	169.92	300mVpk-pk	±5%		94.0%	≤3s
	54.0	3.15	170.10	300mVpk-pk	±5%		94.0%	≤3s

Model Number	Voltage (V)	Current at 15 CFM (A)	Rated Power (W)	Ripple & Noise (max)	Voltage Tolerance	Line & Load Regulation	Efficiency (Average)	Start Up Delay
UES300-XXXYYYSPAZ-OPTF (*6)	12.0	23.33	279.96	150mVpk-pk	±5%		92.0%	≤3s
	15.0	18.67	280.05	150mVpk-pk	±5%		92.0%	≤3s
	18.0	16.67	300.06	150mVpk-pk	±5%		92.0%	≤3s
	19.0	15.79	300.01	200mVpk-pk	±5%	Line: ±1% Load: ±5%	93.0%	≤3s
	24.0	12.50	300.00	200mVpk-pk	±5%		93.0%	≤3s
	36.0	8.33	299.88	300mVpk-pk	±5%		93.0%	≤3s
	48.0	6.25	300.00	300mVpk-pk	±5%		94.0%	≤3s
	54.0	5.56	300.24	300mVpk-pk	±5%		94.0%	≤3s
Standby Power	5.0	0.15	0.75	120mVpk-pk				
FAN	12.0	0.20	2.40					

Notes

(*1) Other options are available, please contact our sales representative for details.

(*2) Measured at output connector with 20MHz bandwidth and 0.1uF ceramic in parallel with 47uF electrolytic capacitors.

(*3)“Z” represents “1” or “2”: “1” refers to the CLASS II standard, used for 2PIN input; “2” refers to the CLASS I standard, used for 3PIN input.

(*4)“-OP” represents Exposed type without fan, rated power:170W Max, 300W output requires complete-unit air duct design and additional fan installation.

(*5)“-OPC” represents Enclosed type without fan, rated power:170W Max, 300W output requires complete-unit air duct design and additional fan installation.

(*6)“-OPTF” represents Enclosed type with fan, rated power:300W.

Universal 300 Watt - UES300-SPAZ-OP

Input

Input Voltage Range	90-264VAC
Frequency Range	47-63Hz
Input Current	3.75 max
Inrush Current	80A max at 240VAC cold start
Touch Leakage Current (max)	≤100μA at 264VAC

Environmental

Operating Temperature	-30℃ to 70℃(50℃ to 70℃ refer to derating curve, for "-OP" and "OPC")
Storage Temperature	-40℃ to 80℃
Operating Humidity	5% to 90% RH, non-condensing
Storage Humidity	5% to 95% RH
Operating Altitude	5,000m

Protection

Over Load	120-160% rated output power, auto recovery
Over Voltage	110-130% rated output power, auto recovery
Short Circuit	Trip and restart (hiccup mode)

General

Dimensions	101.6(L) 50.8(W) 37.1(H)mm(-OP) 119.0(L) 64.0(W) 43.0(H)mm(-OPC) 119.0(L) 64.0(W) 57.8(H)mm(-OPTF)
Weight	180g(-OPC), 280g(-OPC), 310g(-OPTF)
MTBF	>200,000hrs Telcordia_SR-332 at 25℃

Safety Approvals

Safety Agency / Mark	Medical(meet)	ITE(meet)
CB	IEC60601-1	IEC62368-1
TUV-Mark	EN60601-1	-
CE	-	EN62368-1

EMC

Emission	Medical	ITE
Conduction	IEC/EN60601-1-2,CISPR 11	En55032, CISPR 32
Radiation	IEC/EN60601-1-2,CISPR 11	EN55032, CISPR 32
Harmonic Currents	EN61000-3-2, Class B	EN61000-3-2, Class B
Voltage Flicker	EN61000-3-3	EN61000-3-3

Immunity	IEC/EN60601-1-2	EN55035, CISPR 35
ESD	IEC61000-4-2	±15KV air, ±8KV contact
Radiated Immunity	IEC61000-4-3	10V/m ,3V/m 80MHz - 2.7GMHz
EFT/Burst	IEC61000-4-4	±2KV on AC port, ±1KV on signal ports
Surge	IEC61000-4-5	±2KV line - line ,±4KV line - earth
Conducted Immunity	IEC61000-4-6	3Vrms, 6Vrms (0.15MHz-80MHz)
Magnetic Field	IEC61000-4-8	30 A/m
Dips & Interruptions	IEC61000-4-11	0%, 70%, 0% of UT

NOTE:
The power supply is considered a component which will be installed into a final equipment. All EMC tests are executed by mounting the unit on a 360mm*360mm metal plate with 1mm of thickness. The final equipment must be re-confirmed that it still meets EMC directives.

Others

Dielectric Withstand Voltage	4000VAC input to output
Insulation Resistance	100M Ohms, 500VDC input to output

Block Diagram

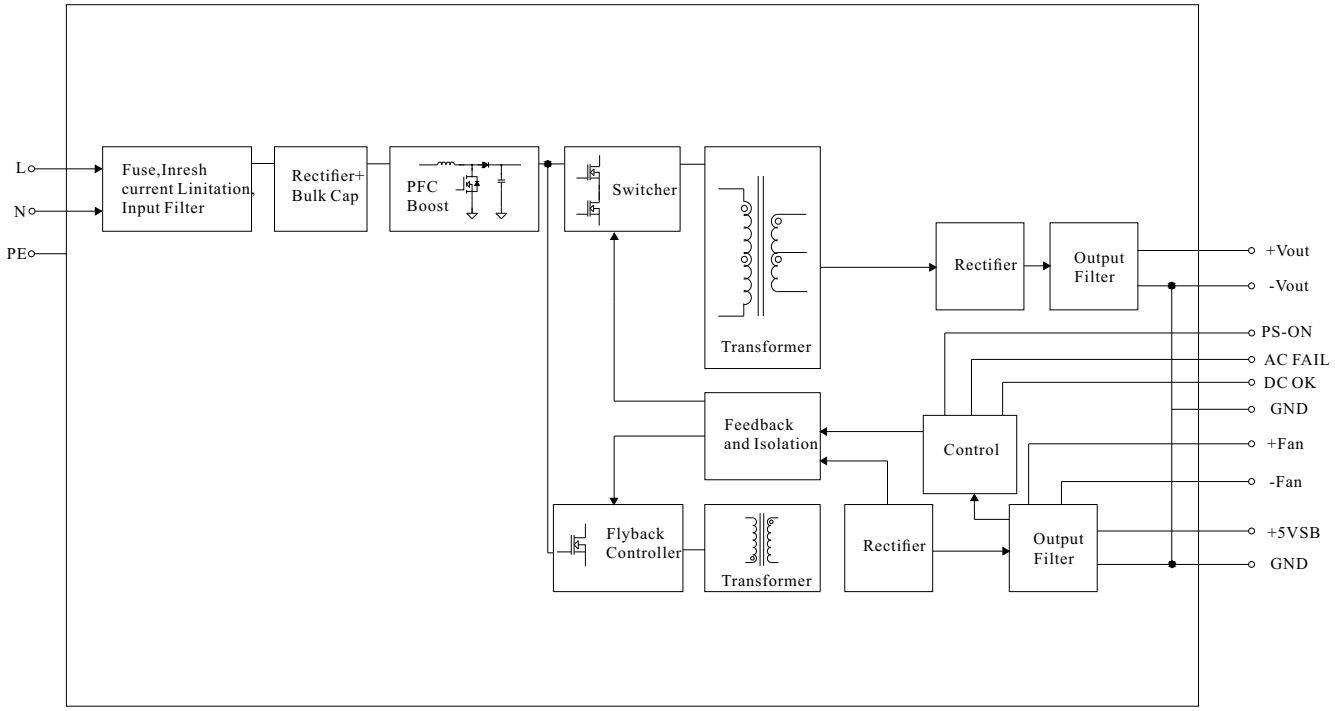

PS-ON INPUT SIGNAL:
Power ON: PS-ON = "Hi" or " > 2 ~ 5V" ; Power OFF: PS-ON = "Low" or " < 0 ~ 0.5V.

POWER GOOD / POWER FAIL:
500ms>PG>10ms ; The TTL signal goes high with 10ms to 500ms delay after power set up ;
The TTL signal goes low at least 1ms before Vo below 90% of rated value.

12V FAN SUPPLY:
12V@0.20A for driving fan ;
Tolerance -15% ~+10% at main output 20% rated current (15CFM).

5V STANDBY:
5Vsb : 5V@0.15A ;
Tolerance ±2%, ripple : 120mVp-p(max.).

Derating Curve

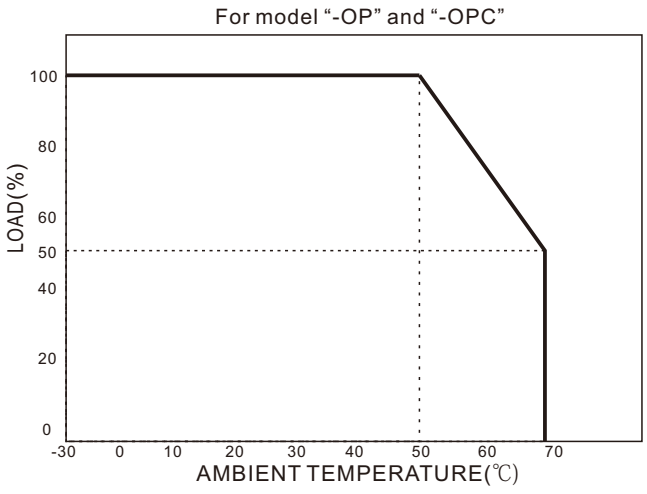

Mechanical Details

● ***UES300-XXXYYYSPAZ-OP(PCB Type)*** ***Unit: mm***

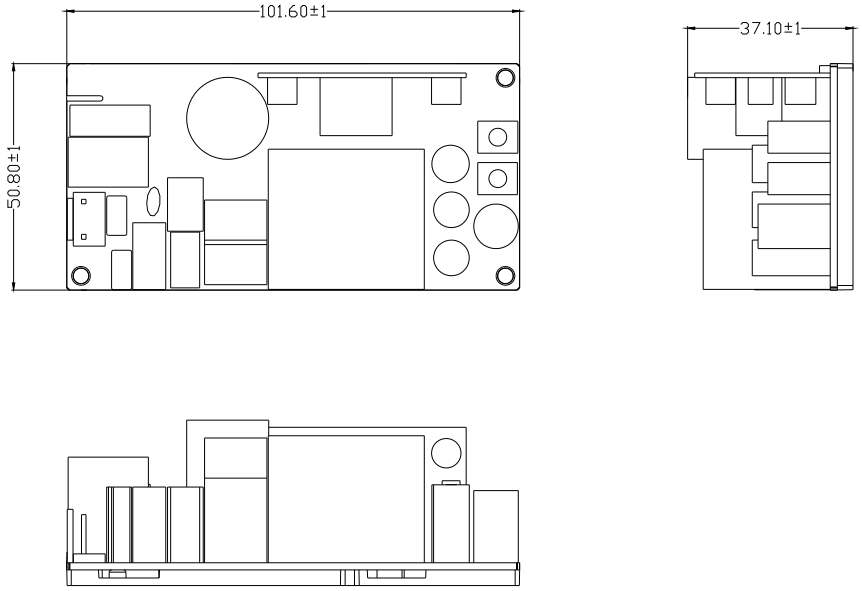

● ***UES300-XXXYYYSPAZ-OPC(Enclosed type without fan)*** ***Unit: mm***

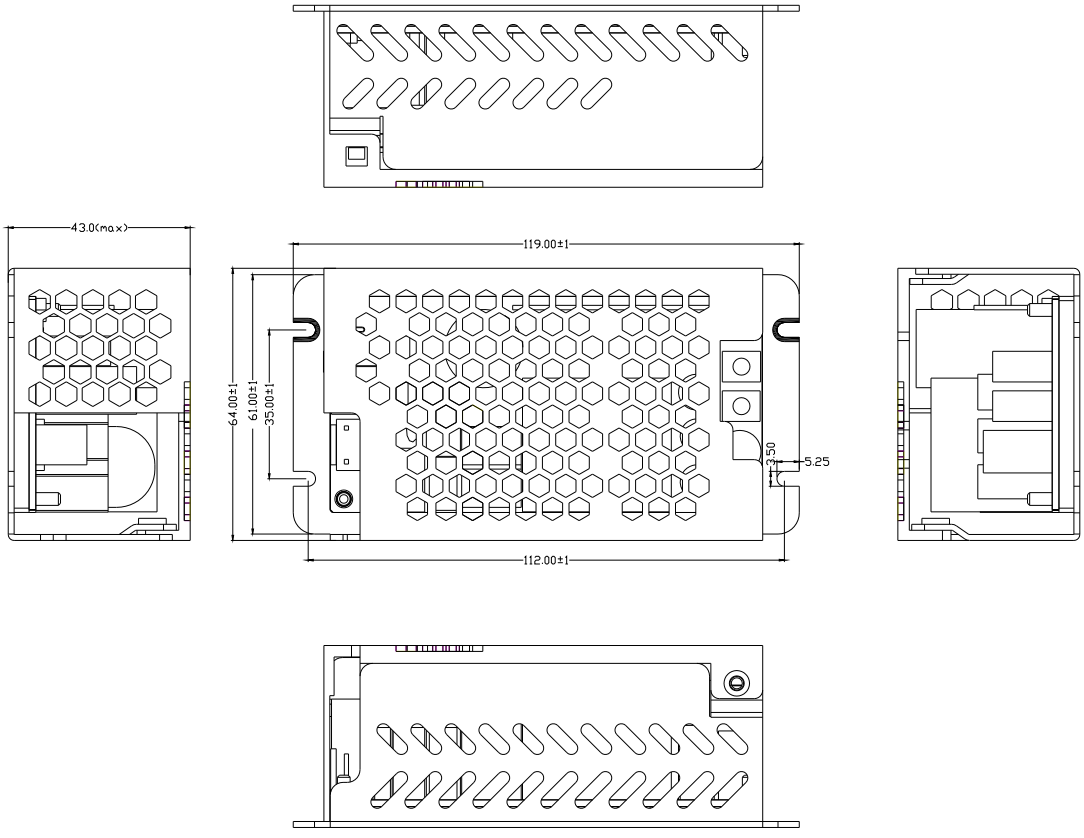

Mechanical Details

● ***UES300-XXXYYYSPAZ-OPTF(Enclosed type with fan)*** ***Unit: mm***

AC Input Connector(J1) :
JST B3P-VH or equivalent

Pin No.	N	L	
Assignment	AC/N	AC/L	

DC Output Connector(Vo+,Vo-):

Pin No.	Vo+	Vo-
Assignment	V+	V-

Function Connector(CCON3):
TKP DH2I-2X2 or equivalen

Pin No.	1	2	3	4	5	6	7	8
Assignment	+5Vsb2	SGND	AC-FALL+	Power-OK+	SGND	SGND	SGND	ON/OFF+

FAN Connector(CCN1) :
TKP 8812-2 or equivalenn

Pin No.	1	2
Assignment	FAN+	FAN-

