UE Electronic

Switching Power Adaptor
Wall plug style&Desktop style

Universal 24 Watt - UES24LCP6-SPA Series
Universal 24 Watt - UES24E-SPA Series

IP42 Class II

NEW

Product Features

- Medical & I.T.E. safety approvals
- 2 MOPP input to output isolation
- Leakage current ≤ 100μA
- Energy efficiency level VI
- ≤ 0.075W standby power
- 5V-24V outputs, up to 24W
- Up to 5,000m operating altitude
- Interchangeable AC plugs



Models & Parameters

Model Number	Voltage(*1) (V)	Current (A)	Rated Power	Ripple & Noise (max)	Voltage Tolerance	Line & Load Regulation	Efficiency (Average)	Start Up Delay
UES24LCP6-XXXYYYSPA UES24E-XXXYYYSPA	5.0-5.9	0.01-3.00	17.70W	120mVpk-pk	±5%	Line:±1% Load: ±5%	83.0%	≤3s
	6.0-7.5	0.01-3.00	22.50W	120mVpk-pk	±5%		86.6%	≤3s
	7.6-8.0	0.01-2.62	21.00W	120mVpk-pk	±5%		86.2%	≤3s
	8.1-8.9	0.01-2.36	21.00W	150mVpk-pk	±5%		86.2%	≤3s
	9.0-10.0	0.01-2.40	24.00W	150mVpk-pk	±5%		86.8%	≤3s
	10.1-11.0	0.01-2.18	24.00W	150mVpk-pk	±5%		86.8%	≤3s
	11.1-12.0	0.01-2.00	24.00W	150mVpk-pk	±5%		86.8%	≤3s
	12.1-13.0	0.01-1.84	24.00W	200mVpk-pk	±5%		86.8%	≤3s
	13.1-14.0	0.01-1.71	24.00W	200mVpk-pk	±5%		86.8%	≤3s
	14.1-15.0	0.01-1.60	24.00W	200mVpk-pk	±5%		86.8%	≤3s
	19.0-20.0	0.01-1.20	24.00W	240mVpk-pk	±5%		86.8%	≤3s
	20.1-21.0	0.01-1.14	24.00W	240mVpk-pk	±5%		86.8%	≤3s
	21.1-22.0	0.01-1.09	24.00W	240mVpk-pk	±5%		86.8%	≤3s
	22.1-23.0	0.01-1.04	24.00W	240mVpk-pk	±5%		86.8%	≤3s
	23.1-24.0	0.01-1.00	24.00W	240mVpk-pk	±5%		86.8%	≤3s

Mechanical Details

Interchangeable AC Plug Options (*2)

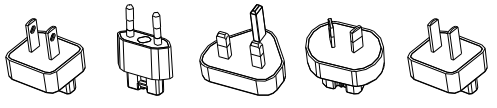

UES24LCP6-XXXYYYSPA

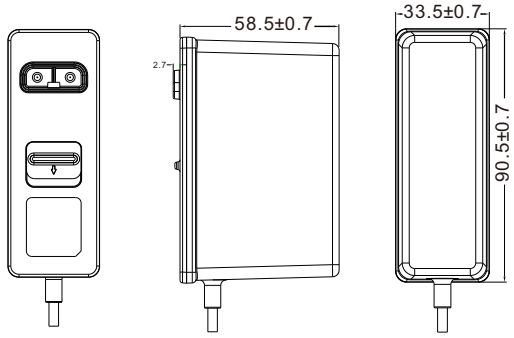

UES24E-XXXYYYSPA

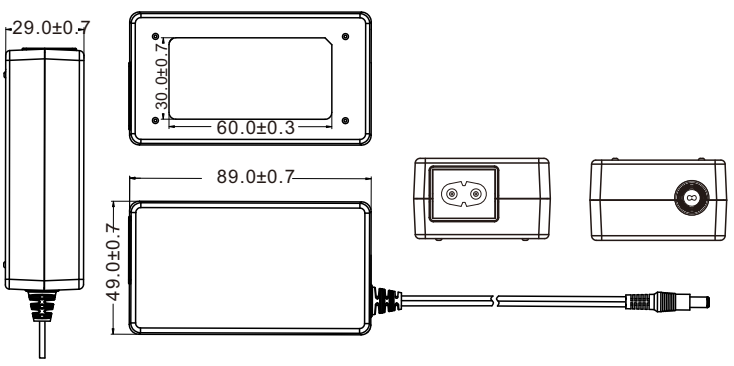

DC cable and connector can be customized.

Unit: mm

Notes
(*1, 2) Other options are available, please contact our sales representative for details.

Universal 24 Watt - UES24LCP6-SPA Series
Universal 24 Watt - UES24E-SPA Series

Input

Input Voltage Range	80-264VAC
Frequency Range	47-63Hz
Input Current	0.7A at 100VAC
Inrush Current	70A max at 240VAC cold start
Touch Leakage Current (max)	≤100μA at 264VAC

Environmental

Operating Temperature	0℃ to 40℃
Storage Temperature	-20℃ to 60℃
Operating Humidity	10% to 90% RH, non-condensing
Storage Humidity	5% to 90% RH
Operating Altitude	5,000m

General

Dimensions	90.5(L) 33.5(W) 58.5(H)mm(UES24LCP6)
	90.5(L) 33.5(W) 58.5(H)mm(UES24E)
Weight	150g
MTBF	>100,000hrs Telcordia_SR-332 at 25℃

Protection

Overload	110-200% rated output power, auto recovery
Over Voltage	110-150% rated output voltage input to reset
Short Circuit	Trip and restart (hiccup mode)

Safety Approvals

Safety Agency / Mark	Medical	ITE
CB	IEC60601-1	IEC62368-1
UL	ANSI/AAMI ES60601-1 CAN/CSA C22.2 NO. 60601-1	- -
TUV Mark	EN60601-1	EN62368-1
CCC	-	GB4943.1
PSE	-	J62368
KC	-	K62368-1
RCM	-	AS/NZS 62368.1
FCC	-	FCC PART 15
	-	

EMC

Emission	Medical	ITE
Conduction	IEC/EN60601-1-2,CISPR 11	EN55032, CISPR32
Radiation	IEC/EN60601-1-2,CISPR 11	EN55032, CISPR32
Harmonic Currents	EN61000-3-2, Class A	EN61000-3-2, Class A
Voltage Flicker	EN61000-3-3	EN61000-3-3
Immunity	**IEC/EN60601-1-2**	**EN55035, CISPR 35**
ESD	IEC61000-4-2	±15KV air, ±8KV contact
Radiated Immunity	IEC61000-4-3	10V/m, 3V/m 80MHz - 2.7GHz
EFT/Burst	IEC61000-4-4	±2KV on AC port, ±1KV on signal ports
Surge	IEC61000-4-5	±1KV line to line (DM)
Conducted Immunity	IEC61000-4-6	3Vrms, 6Vrms (0.15MHz-80MHz)
Magnetic Field	IEC61000-4-8	30 A/m
Dips & Interruptions	IEC61000-4-11	0%, 70%, 0% of UT

Others

Dielectric Withstand Voltage	4000VAC input to output
Insulation Resistance	10M Ohms, 500VDC input to output